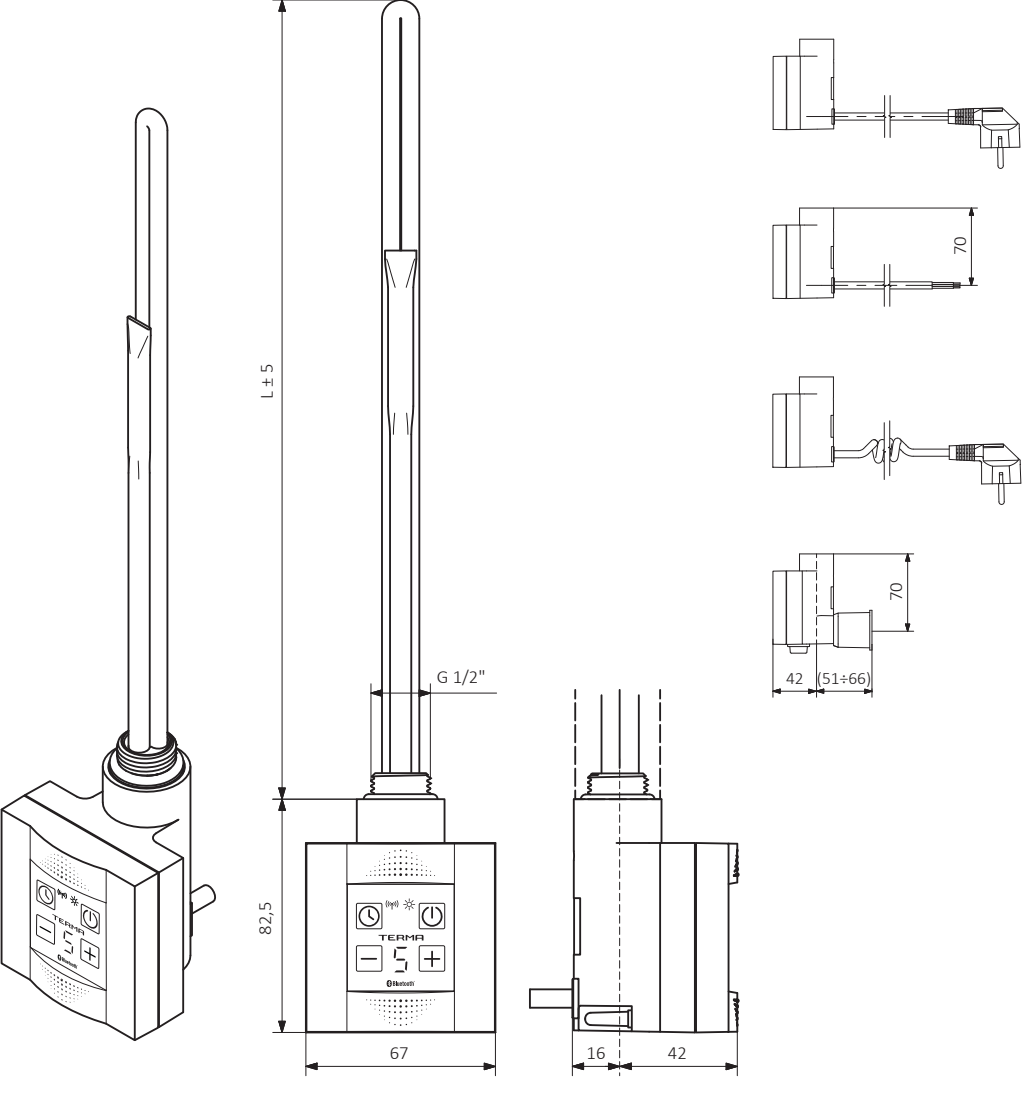
L ± 5
G 1/2"
82,5
67
16
42
TERMA
Bluetooth
70
70
42
(51÷66)